OAKCASTLE

TV200

Wireless TV Speaker with Docking Station

USER MANUAL

EN Contents

What's In the Box?..... 3
Controls And Functions..... 4
Instructions Guide..... 6
- Getting Started (Product Set-up)..... 6
- Basic Operations..... 7
- HDMI ARC Input..... 8
- Optical Input..... 9
- AUX Input..... 10
- TV200 speaker- battery replacement..... 11

Troubleshooting &Support..... 12
Specification..... 13
Warranty..... 13
Warning and Safety Information..... 14

3 year Warranty
Register your product online for a FREE 3 year extended warranty at: **www.oakcastle.co.uk**

A. Oakcastle TV200 Wireless TV Speaker
B. TV200 Docking Station
C. USB-C Power Adaptor
D. Optical cable
E. 3.5 mm AUX Audio Cable
F. User manual

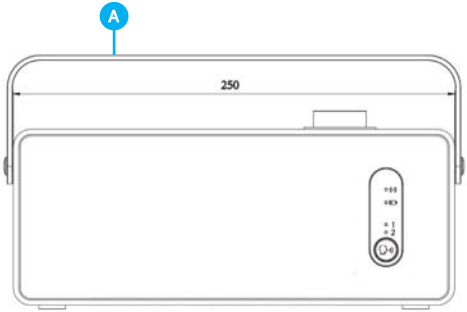

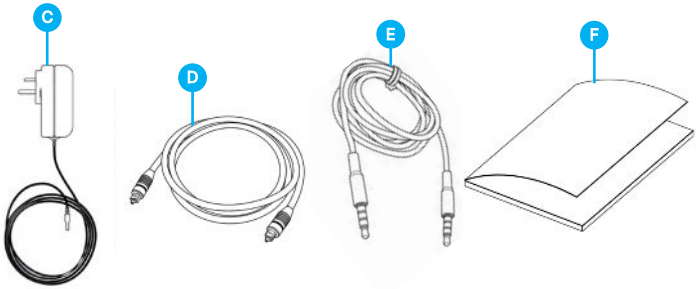

Controls and Functions

The front and the top view TV200 speaker with its base

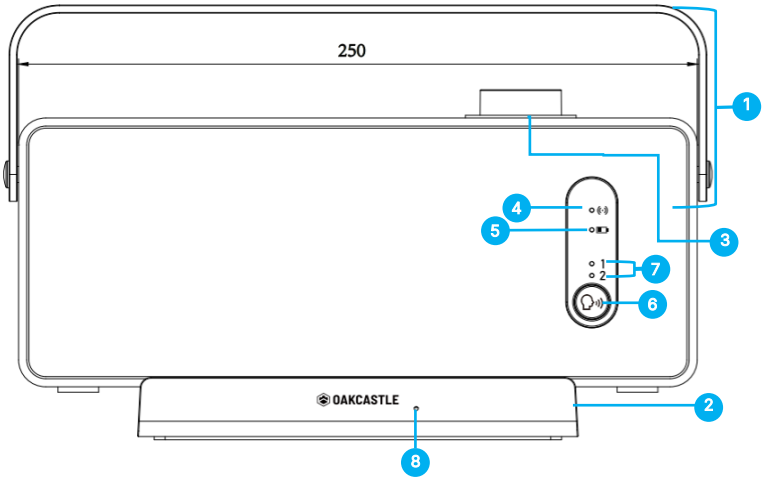

1. TV200 Portable TV Speaker with Carry Handle
2. TV200 Wireless Docking Station
3. Power On/Off & Volume (+/–) Knob
4. Speaker Docking Connection LED Indicator
5. Battery Status LED Indicator
6. Speech EQ Button
7. Speech EQ Level 1 & Level 2 LED Indicators
8. Docking Station Status LED Indicator

The Oakcastle TV200 speaker and wireless docking base

Back view

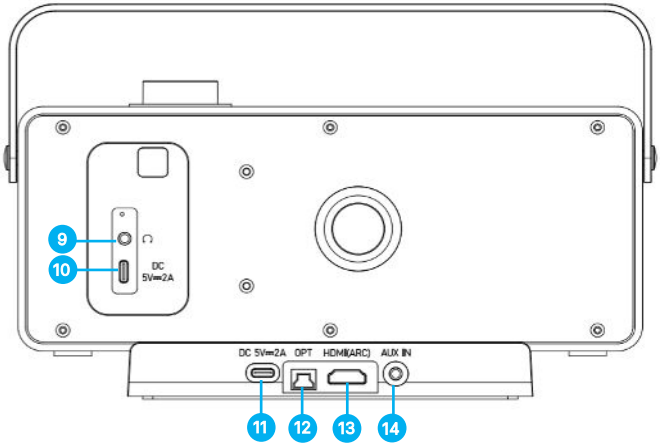

9. Headphone Output (3.5 mm)
10. USB-C Charging Port (Portable TV Speaker)
11. USB-C Power Input (Docking Base)
12. Optical Input
13. HDMI ARC Input
14. AUX Input

***PLEASE NOTE**: Throughout this user manual, references to controls on the TV200 Neckband and Docking Station are shown as (**Ref. x**). Please refer to the product diagrams on pages 4–5.*

Unboxing

Remove all packaging from the Oakcastle TV200 portable TV speaker and its Docking Station.

Place the Oakcastle TV200 Docking Station on a flat, stable surface, such as a table, desk, or TV cabinet, close to your TV and within easy reach of a mains power outlet. Keep it away from direct sunlight, excessive heat, dust, moisture, humidity, and vibration. Allow sufficient space around the **Docking Station** for ventilation. Do not place it inside a cabinet or enclosed shelf.

Prepare for Set-Up

Connect the USB-C power adaptor to the **USB-C Power Input** on the Docking Station **(Ref.11)**.

Ensure the mains supply voltage is between **100–240 V**. Using any other voltage may damage the unit.

Connect your TV to the Docking Station using one of the available audio connections: **HDMI ARC**, **Optical**, or **AUX**

Plug the **TV200 Docking Station** into a mains power outlet. Place the Oakcastle TV200 speaker onto the Docking Station. The **Docking Connection LED Indicator (Ref.4)** will illuminate to confirm that the speaker is correctly docked and charging.

During playback, the TV200 can be used either while docked on the **Docking Station** or as a portable TV speaker using its built-in rechargeable battery.

When used on battery power, the TV200 speaker has a wireless operating range of up to **10 metres** from its **Docking Station**. For the best wireless performance, ensure there are no large walls or substantial pieces of furniture between the TV speaker and the Docking Station, as these may interrupt the wireless audio signal.

When the TV200 speaker battery is running low, place the speaker back onto its **Docking Station** to recharge. Alternatively, you can connect the speaker directly to a mains power outlet using the supplied USB-C power adaptor connected to the **USB-C Charging Port (Ref.10)** on the rear of the speaker.

While the battery is charging, the **Battery Status LED Indicator (Ref.5)** will illuminate **red**. The LED will switch off once the battery is fully charged.

The Oakcastle TV200 speaker can be used while charging, either when docked on the **Docking Station** or when connected directly to the mains power supply using the USB-C power adaptor.

Power On / Off & Volume +/–

To switch the Oakcastle TV200 on or off, rotate the **Power On/Off & Volume** knob **(Ref.3)** to the right or left. You will hear a click when the speaker is switched on or off.

The same knob is also used to adjust the volume. After powering the TV speaker on, rotate it to the right to increase the volume or to the left to decrease the volume.

Speech Equaliser (Speech EQ)

The **Speech EQ** feature enhances dialogue by boosting vocal frequencies and reducing background noise, making speech clearer and easier to understand.

Press the **Speech EQ** button **(Ref.6)** repeatedly to cycle through the available sound modes:

- **Default Mode** – Standard audio with no additional sound processing.
  Best for: General TV viewing, music, and everyday entertainment.
- **Speech Level 1** – Provides a subtle enhancement to vocal clarity, making dialogue more distinct without affecting the overall sound balance.
  Best for: News, documentaries, talk shows, and regular TV programmes.
- **Speech Level 2** – Delivers maximum voice enhancement by further boosting speech frequencies while reducing background noise and bass.
  Best for: Films with loud soundtracks, action scenes, or for listeners who find dialogue difficult to hear.

The **Speech Level 1** and **Speech Level 2 LED Indicators (Ref.7)** will illuminate to show the currently selected mode. Press the **Speech EQ** button again after **Speech Level 2** to return to the **Default Mode**.

Headphone Jack

For private listening connect wired headphones with 3.5 mm jack (not included) to the TV speaker headphone port (Ref.9)

Warning: *Listening to headphones at high volume levels for prolonged periods may cause permanent hearing damage. Always keep the volume at a comfortable listening level.*

Automatic Power-Off Function

The Oakcastle TV200 will automatically switch off after **15 minutes** if no audio signal is received from the connected device or if the TV or audio source has been switched off.

To resume operation, rotate the **Power On/Off & Volume** knob **(Ref.3)** to switch the speaker back on.

Connecting the Oakcastle TV200 to a TV Using the HDMI ARC Input

The Oakcastle TV200 supports **HDMI ARC (Audio Return Channel)**. If your TV is HDMI ARC compatible, you can hear the TV audio through the TV200 speaker using this connection method.

Important: *Before making any connections, ensure that both devices are switched off and unplugged from the mains power supply.*

Step 1: Connect the Oakcastle TV200 Docking Station to your TV using a High-Speed HDMI cable (not included). Insert one end of the HDMI cable into the **HDMI ARC Input (Ref.13)** on the Docking Station and the other end into the **HDMI ARC** port on your TV (please refer to your TV user manual if required). Once the cable is securely connected to both devices, plug them into the mains power supply and switch them on.

Step 2: Adjust the TV audio settings. Set the TV audio output to **HDMI ARC** and ensure that **HDMI-CEC** is enabled. Navigate to your TV's Sound Settings or Advanced Audio Settings and set the Digital Audio Output or Digital Audio Format to PCM, Stereo, or Uncompressed, depending on the options available on your TV.

The TV audio should now be heard through the Oakcastle TV200 speaker.

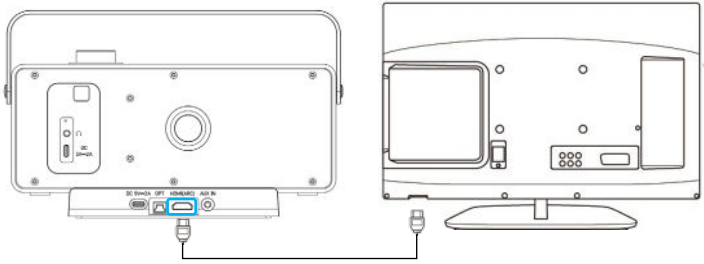

PLEASE NOTE*: If you have no sound coming out through the Oakcastle TV200 when using this type of connection, please refer to the TV's user manual for HDMI ARC compliance .In case you still have issues then , use a different type of cable connection such as Optical or AUX.*

The terms HDMI, HDMI High-Definition Multimedia Interface, HDMI trade dress and the HDMI Logos are trademarks or registered trademarks of HDMI Licensing Administrator, Inc.

Connecting the Oakcastle TV200 to a TV Using the Digital Optical Input

Important: *Before making any connections, ensure that both devices are switched off and unplugged from the mains power supply.*

Step 1: Connect the Docking Station to your TV using the optical cable. Insert one end of the cable into the **Optical Input (Ref.12)** on the Docking Station and the other end into the **Optical Audio Output** on your TV (please refer to your TV user manual if required). Once the cable is securely connected to both devices, plug them into the mains power supply and switch them on.

Step 2: Adjust the TV audio settings. Set the TV audio output to Digital **Optical**. Navigate to your TV's Sound Settings or Advanced Audio Settings and set the Digital Audio Output or Digital Audio Format to PCM, Stereo, or Uncompressed, depending on the options available on your TV.

The TV audio will now be heard through the Oakcastle TV200 speaker. Adjust the volume using the **Power On/Off & Volume** knob **(Ref.3)** on the speaker.

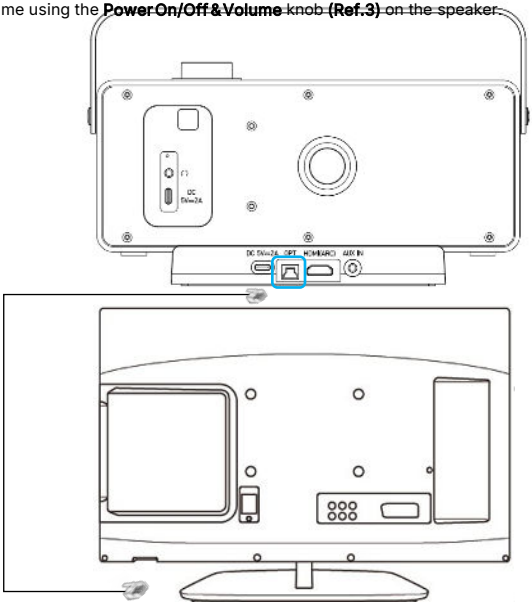

Connecting the Oakcastle TV200 to a TV or Other Device Using the AUX Input

The Oakcastle TV200 can be connected to a TV, smartphone, tablet, MP3 player, or any other compatible device with an **AUX Output** or **headphone output**.

Important: Before making any connections, ensure that both devices are switched off and unplugged from the mains power supply.

Step 1: Connect the Docking Station to your TV or other audio device using the **3.5 mm AUX-to-AUX cable**. Insert one end of the cable into the **AUX Input (Ref.14)** on the Docking Station and the other end into the **AUX Output** or **headphone output** on your TV or audio device. Once the cable is securely connected to both devices, plug them into the mains power supply and switch them on.

Step 2: If connecting to a TV, navigate to your TV's **Sound Settings** or **Advanced Audio Settings** and set the **Digital Audio Output** or **Digital Audio Format** to **PCM**, **Stereo**, or **Uncompressed**, if these settings are available.

Step 3: Start playing audio from your connected device. Control playback from the source device and adjust the volume on both the source device and the Oakcastle TV200 using the **Power On/Off & Volume** knob **(Ref.3)**.

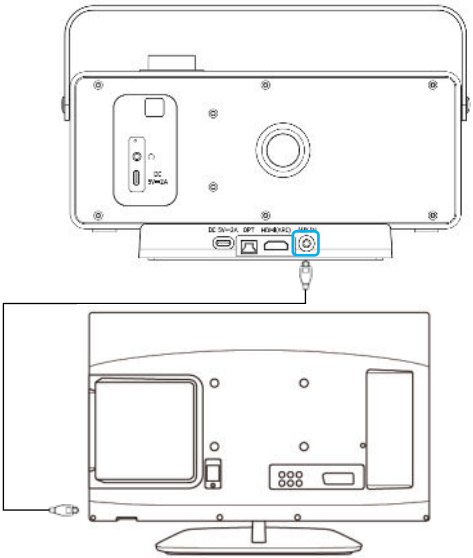

Important: *Before replacing the battery, switch the speaker off and disconnect it from the mains power supply. Only use a replacement battery of the same type and specification recommended by Oakcastle.*

The TV200 wireless speaker is powered by a rechargeable 3.7 V lithium-ion battery (2000 mAh, 7.4 Wh), measuring Ø18.5 × 65.5 mm (D × H)

- Using a suitable screwdriver, remove the **six screws** securing the rear panel of the speaker.
- Carefully remove the rear panel to access the internal battery compartment.
- Remove the **two screws** securing the battery holder.
- Lift out the battery holder and carefully remove the battery.
- Disconnect the battery connector from the internal socket.
- Connect the replacement battery, ensuring the connector is fully inserted and correctly aligned.
- Refit the battery into the compartment and replace the battery holder. Secure it using the **two screws** removed earlier.
- Refit the rear panel and secure it using the **six screws**.
- Charge the battery fully before using the speaker.

Note: *Dispose of the old battery responsibly in accordance with local regulations for recycling rechargeable batteries. Do not dispose of batteries with household waste.*

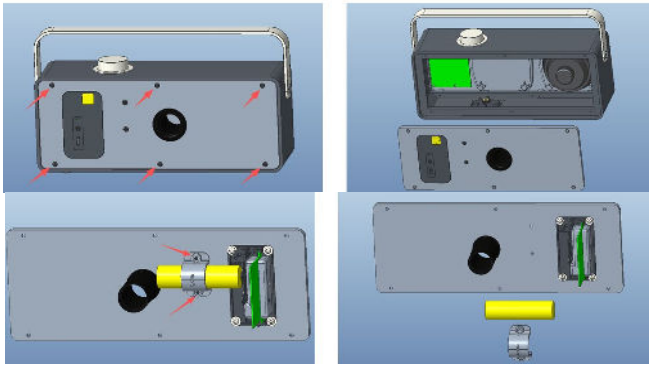

Observation	Potential Cause/Solution
No power/function	Check that the power is switched on at the wall socket. Check that the power adaptor is properly connected to the Docking Station and to the wall socket power outlet. Try a different wall socket.
No sound	Rotate the Volume +/- knob to increase the volume. Check whether the TV is set to MUTE. Check that the cables are properly installed. If cables are properly installed, please try connecting to your TV using an alternative cable. Set the TV digital audio format in TV settings to PCM. Check if the unit is switched on and set in the correct mode.
No sound when connected and switched to HDMI ARC mode.	Check and ensure the audio setting of the input (e.g. TV, games console etc.) is set to HDMI ARC mode and if the TV is complaint with ARC. Check whether the HDMI ARC cable is correctly connected to the TV HDMI ARC port. Change the TV's audio output to HDMI ARC, enable CEC and pass through, set the digital audio format to PCM.
The volume is too low- when TV is connected to Fire TV stick or a Freeview/Freesat Box.	Increase the volume on the **Fire TV Stick**, **Freeview**, or **Freesat** box using its own remote control (if applicable). ncrease the volume on the **Oakcastle TV200** using the **Power On/Off & Volume** knob **(Ref.3)**. Check that the volume on your TV is also set to an appropriate level, if applicable. If there is no sound or the audio remains very low, check the audio settings on your **Fire TV Stick**, **Freeview**, or **Freesat** box and set the **Digital Audio Format** or **Digital Audio Output** to **PCM**, **Stereo**, or **Uncompressed**.

Contact Support

If you require assistance with your new **Oakcastle TV200**, please contact our Tech Support team by completing the form on the Oakcastle website:
www.oakcastle.co.uk/support, or via email @ techsupport@oakcastle.co.uk .

Specification

Power Supply	AC100-240V, 50/60Hz.
TV200 speaker battery	rechargeable 3.7 V lithium-ion battery (2000 mAh, 7.4 Wh), measuring Ø18.5 × 65.5 mm (D × H)
TV200 speaker playback on battery power	Up to 10 hours
Product Weight	0.9 kg
No load power	0.06W
Power adaptor average efficiency	79.85%

Warranty

All products come with a standard 12-month warranty. All products must be registered within 30 days of purchase on **www.oakcastle.co.uk** for the warranty to be valid. Once on our website, use the menu to find '**Register Your Product'.** You will also be given the chance to extend your warranty for an additional 24 months, free of charge.

Warning & Safety Information

Declaration of Conformity:
We, iZilla Limited, 1 Cygnus Business Park, Middlewatch, Swavesey, Cambridgeshire CB24 4AA, declare under our sole responsibility that the product:
Product Name: Oakcastle TV200 TV speaker **Model:** 1000003149
Brand Name: Oakcastle

To which this declaration referred is in conformity to the following harmonized standards or normative documents (CE & Rohs 2.0) ;
EN 55035:2017, EN 55032:2015, EN61000-3-2:2014, EN61000-3-3:2013, EEN62368-1:2004+A11:2017, ETSI EN 301 489-1 V2.2.3(2019-11), ETSI EN 301 489-17, V3.2.2(2019-12), ETSI EN 300 328 V2.2.2 (2019-07), EN 62479: 2010, IEC 62321-3-1:2013, IEC 62321-4:2013, IEC 62321-5:2013, IEC 62321-6:2015, IEC 62321-7-1:2015, IEC 62321-7-2:2017, IEC 62321-8:2017, (EC)NO 1275/2008,EN50564:2011, (EC)NO 801/2013.

Complying with the requirements or provisions of Council Directives which relate to:
EMC Directive 2014/30/EU, RED Directive 2014/53/EU, LVD Directive 2014/35/EU, Directive (2011/65/EU) and its amendment directives 2015/863/EU (RoHS 2.0) of the, European parliament, ERP Directive 2009/125/EC.

All essential test suites have been carried out.
Point of Contact: Eddie Latham | Founder

Signed: E.Latham **Date of Issue:** January 2026 **Place of Issue:** Cambridge, UK

Importer's Addresses:
UK: iZilla Limited, 1 Cygnus Business Park, Middlewatch, Swavesey, Cambridgeshire CB24 4AA
Email: info@oakcastle.co.uk

EU RP: AR Experts, Po Box 5047, 3620 AA Breukelen, The Netherlands
Email: info@ar-experts.eu

US: iZilla Ltd C/O A.N.Deringer Inc, 19520 Wilmington Ave, Rancho Dominguez, CA, 90220
Email: info@oakcastle.co.uk



ATTENTION
RISK OF ELECTRIC SHOCK DO NOT OPEN



CAUTION
RISQUE D'ELECTROCUTION NE PAS OUVRIR



IMPORTANT: Please read all instructions carefully before use and keep for future reference

Warning & Safety Information

EN **Safety and Usage Guidelines (All where applicable)**
General Safety Information – Read and Retain: Review all safety and operating instructions before use; keep them for future reference. **Follow Instructions:** Adhere strictly to all safety and operational guidelines. **Water Exposure:** Keep the device away from water; avoid placing liquids near it. **Ventilation:** Ensure ventilation openings are unobstructed to prevent overheating. **Heat Sources:** Keep the device away from heat-emitting appliances. **Wall Mounting – Installation Safety:** Follow the manufacturer's instructions and use approved mounting kits only. Avoid drilling into areas with cables, gas, or water lines. Use proper tools and safety apparatus. **Regular Maintenance:** Inspect regularly for wear or damage, especially if wall-mounted. **Relocation:** Detach from the wall mount before moving. **Child Safety:** Keep out of children's reach and ensure heavy items are securely mounted. **Seismic Precautions:** Use specialized mounts in earthquake-prone areas. **Electrical Safety – Power Source:** Use the specified power source; consult an electrician if unsure. **Cable Management:** Protect the power cord from damage. **Power Disconnection:** Keep the main plug accessible; unplug during storms or long periods of non-use. **Battery Safety – Charging:** Use the manufacturer's charger; avoid extreme conditions. **Heat Exposure:** Keep batteries away from heat to prevent explosion or leakage. **Battery Condition:** Discontinue use if the battery is damaged; dispose of it properly. **Replacement:** Only use recommended batteries; incorrect types can cause hazards. **External Batteries:** Use only specified types, observing correct polarity. **Battery Removal:** Remove batteries if not used for an extended period. **Disposal:** Follow local regulations for battery disposal; do not incinerate. **Connectivity Safety – Cable Connections:** Power off devices before connecting or disconnecting cables. **Bluetooth Pairing:** Ensure a secure connection; avoid interference from other devices. **Volume Control:** Keep volume moderate to prevent hearing damage. **Connectivity and Data Security – Wireless Security:** Review privacy policies and secure your network. **Software Updates:** Keep software updated for security and performance. **Children's Safety Warnings – Product Use:** Intended for adults; keep away from children. **Battery Warning:** Keep batteries and items containing batteries out of children's reach. **Volume Control:** Maintain a safe volume level to protect children's hearing. **Fire Hazard – Flammable Materials:** Do not place open flames near the product. **Overheating:** Avoid covering the product to prevent overheating and fire risks. **Disposal and Recycling – Product Disposal:** Dispose of at a recycling centre according to local laws. **Environmental Compliance:** Follow regulations for battery and electronic waste disposal. **User Maintenance – Cleaning:** Unplug before cleaning; use a dry cloth only. **Servicing:** Only qualified personnel should perform repairs. **Data Protection:** Reset to factory settings before returning or disposing of the product. **Disclaimer:** Failure to follow these instructions may result in injury, death, or property damage. The manufacturer is not liable for damage caused by improper use.

DE **Sicherheits- und Verwendungsrichtlinien (alle, wo zutreffend)**
Allgemeine Sicherheitsinformationen – Lesen und Aufbewahren: Überprüfen Sie alle Sicherheits- und Bedienungsanleitungen vor der Verwendung; bewahren Sie diese für zukünftige Referenz auf. **Befolgen Sie die Anweisungen:** Halten Sie sich strikt an alle Sicherheits- und Betriebsrichtlinien. **Wasserexposition:** Halten Sie das Gerät fern von Wasser; vermeiden Sie das Platzieren von Flüssigkeiten in der Nähe. **Belüftung:** Stellen Sie sicher, dass die Belüftungsöffnungen nicht blockiert sind, um Überhitzung zu vermeiden. **Wärmequellen:** Halten Sie das Gerät fern von wärmeabstrahlenden Geräten. **Wandmontage – Sicherheit bei der Installation:** Befolgen Sie die Anweisungen des Herstellers und verwenden Sie nur zugelassene Montagesätze. Vermeiden Sie das Bohren in Bereiche mit Kabeln, Gas- oder Wasserleitungen. Verwenden Sie geeignete Werkzeuge und Sicherheitsausrüstung. **Regelmäßige Wartung:** Überprüfen Sie regelmäßig auf Abnutzung oder Beschädigungen, insbesondere bei Wandmontage. **Umzug:** Lösen Sie das Gerät von der Wandhalterung, bevor Sie es bewegen. **Kindersicherheit:** Halten Sie das Gerät außerhalb der Reichweite von Kindern und stellen Sie sicher, dass schwere Gegenstände sicher montiert sind. **Vorkehrungen bei Erdbeben:** Verwenden Sie in erdbebengefährdeten Gebieten spezielle Halterungen. **Elektrische Sicherheit – Stromquelle:** Verwenden Sie die angegebene Stromquelle; konsultieren Sie einen Elektriker, wenn Sie unsicher sind. **Kabelmanagement:** Schützen Sie das Stromkabel vor Beschädigungen. **Stromtrennung:** Halten Sie den Hauptstecker zugänglich; ziehen Sie den Stecker bei Gewittern oder längerer Nichtbenutzung heraus. **Batteriesicherheit – Laden:** Verwenden Sie das vom Hersteller bereitgestellte Ladegerät; vermeiden Sie extreme Bedingungen. **Wärmeexposition:** Halten Sie Batterien fern von Hitze, um Explosionen oder Auslaufen zu verhindern. **Batteriezustand:** Bei Beschädigungen die Nutzung einstellen; ordnungsgemäß entsorgen. **Ersatz:** Verwenden Sie nur empfohlene Batterien; falsche Typen können Gefahren verursachen. **Externe Batterien:** Verwenden Sie nur spezifizierte Typen und beachten Sie die korrekte Polarität. **Batterieentfernung:** Entfernen Sie Batterien bei längerer Nichtbenutzung. **Entsorgung:** Befolgen Sie lokale Vorschriften zur Batterientsorgung; nicht verbrennen. **Verbindungssicherheit – Kabelverbindungen:** Schalten Sie Geräte vor dem Verbinden oder Trennen von Kabeln aus. **Bluetooth-Kopplung:** Stellen Sie eine sichere Verbindung her; vermeiden Sie Störungen durch andere Geräte. **Lautstärkeregelung:** Halten Sie die Lautstärke moderat, um Hörschäden zu vermeiden. **Verbindungs- und Datensicherheit – WLAN-Sicherheit:** Überprüfen Sie die Datenschutzrichtlinien und sichern Sie Ihr Netzwerk. **Software-Updates:** Halten Sie die Software für Sicherheit und Leistung aktuell. **Sicherheitswarnungen für Kinder – Produktnutzung:** Nur für Erwachsene bestimmt; von Kindern fernhalten. **Batteriewarnung:** Halten Sie Batterien und Produkte mit Batterien außerhalb der Reichweite von Kindern. **Lautstärkeregelung:** Halten Sie die Lautstärke zum Schutz des Gehörs von Kindern sicher. **Brandgefahr – Entflammbare Materialien:** Stellen Sie keine offenen Flammen in die Nähe des Produkts. **Überhitzung:** Decken Sie das Produkt nicht ab, um Überhitzung und Brandgefahr zu vermeiden. **Entsorgung und Recycling – Produktentsorgung**: Entsorgen Sie das Produkt gemäß den lokalen Vorschriften in einem Recyclingzentrum. **Umweltkonformität:** Befolgen Sie die Vorschriften zur Entsorgung von Batterien und Elektronikabfall. **Benutzerwartun – Reinigung:** Vor der Reinigung vom Stromnetz trennen; nur ein trockenes Tuch verwenden. **Wartung:** Reparaturen nur von qualifiziertem Personal durchführen lassen. **Datenschutz**: Setzen Sie das Gerät vor Rückgabe oder Entsorgung auf Werkseinstellungen zurück. **Haftungsausschluss:** Die Nichtbeachtung dieser Anweisungen kann zu Verletzungen, Tod oder Sachschäden führen. Der Hersteller haftet nicht für Schäden, die durch unsachgemäße Nutzung verursacht werden.

Warning & Safety Information

FR **Consignes de Sécurité et d'Utilisation (toutes celles applicables)**
Informations Générales de Sécurité - Lire et Conserver : Consultez toutes les consignes de sécurité et d'utilisation avant usage ; conservez-les pour référence future. **Suivre les Instructions :** Respectez strictement toutes les consignes de sécurité et d'utilisation. **Exposition à l'Eau :** Gardez l'appareil à l'écart de l'eau ; évitez de placer des liquides à proximité. **Ventilation :** Assurez-vous que les ouvertures de ventilation ne sont pas obstruées pour éviter la surchauffe. **Sources de Chaleur :** Tenez l'appareil à l'écart des appareils émettant de la chaleur. **Fixation Murale - Sécurité de l'Installation :** Suivez les instructions du fabricant et n'utilisez que les kits de montage approuvés. Évitez de percer des zones contenant des câbles, des conduites de gaz ou d'eau. Utilisez des outils et équipements de sécurité appropriés. **Entretien Régulier :** Inspectez régulièrement l'appareil pour détecter tout signe d'usure ou de dommage, en particulier s'il est fixé au mur. **Repositionnement :** Détachez l'appareil du support mural avant de le déplacer. **Sécurité des Enfants :** Gardez l'appareil hors de portée des enfants et assurez-vous que les objets lourds sont solidement fixés. **Précautions Sismiques :** Utilisez des supports spécialisés dans les zones sujettes aux tremblements de terre. **Sécurité Électrique - Source d'Alimentation :** Utilisez la source d'alimentation spécifiée ; consultez un électricien en cas de doute. **Gestion des Câbles :** Protégez le cordon d'alimentation contre les dommages. **Déconnexion de l'Alimentation :** Gardez la prise principale accessible ; débranchez en cas d'orage ou de non-utilisation prolongée. **Sécurité des Piles - Recharge :** Utilisez le chargeur du fabricant ; évitez les conditions extrêmes. **Exposition à la Chaleur :** Gardez les piles à l'écart de la chaleur pour éviter l'explosion ou les fuites. **État de la Pile :** Cessez l'utilisation si la pile est endommagée ; jetez-la correctement. **Remplacement :** N'utilisez que les piles recommandées ; des types incorrects peuvent causer des dangers. **Piles Externes :** Utilisez uniquement les types spécifiés, en respectant la polarité. **Retrait des Piles :** Retirez les piles si l'appareil n'est pas utilisé pendant une longue période. **Élimination :** Suivez les réglementations locales pour l'élimination des piles ; ne les incinérez pas. **Sécurité de la Connectivité - Connexions de Câbles :** Éteignez les appareils avant de connecter ou de déconnecter des câbles. **Appairage Bluetooth :** Assurez-vous d'une connexion sécurisée ; évitez les interférences avec d'autres appareils. **Contrôle du Volume :** Maintenez un volume modéré pour éviter les dommages auditifs. **Sécurité de la Connectivité et des Données - Sécurité du Réseau Sans Fil :** Examinez les politiques de confidentialité et sécurisez votre réseau. **Mises à Jour Logicielles :** Gardez le logiciel à jour pour la sécurité et la performance. **Avertissements de Sécurité pour les Enfants - Utilisation du Produit :** Destiné aux adultes ; gardez hors de portée des enfants. **Avertissement sur les Piles :** Gardez les piles et les articles contenant des piles hors de portée des enfants. **Contrôle du Volume :** Maintenez un niveau sonore sûr pour protéger l'audition des enfants. **Risque d'Incendie - Matériaux Inflammables :** Ne placez pas de flammes nues près du produit. **Surchauffe :** Évitez de couvrir le produit pour prévenir la surchauffe et les risques d'incendie. **Élimination et Recyclage - Élimination du Produit :** Déposez-le dans un centre de recyclage conformément aux lois locales. **Conformité Environnementale :** Suivez les réglementations concernant l'élimination des piles et des déchets électroniques. **Entretien de l'Utilisateur - Nettoyage :** Débranchez avant de nettoyer ; utilisez uniquement un chiffon sec. **Réparations :** Seul le personnel qualifié doit effectuer les réparations. **Protection des Données :** Réinitialisez aux paramètres d'usine avant de retourner ou d'éliminer le produit. **Clause de Non-Responsabilité -** Le non-respect de ces consignes peut entraîner des blessures, la mort ou des dommages matériels. Le fabricant décline toute responsabilité en cas de dommages causés par une mauvaise utilisation.

ES **Guías de Seguridad y Uso (Cuando sea aplicable)**
Información General de Seguridad - Leer y Conservar: Revise todas las instrucciones de seguridad y operación antes de usar; guárdelas para referencia futura. **Seguir las Instrucciones:** Cumpla estrictamente con todas las guías de seguridad y operativas. **Exposición al Agua:** Mantenga el dispositivo alejado del agua; evite colocar líquidos cerca de él. **Ventilación:** Asegúrese de que las aberturas de ventilación no estén obstruidas para evitar el sobrecalentamiento. **Fuentes de Calor:** Mantenga el dispositivo alejado de aparatos que emitan calor. **Montaje en Pared - Seguridad de Instalación:** Siga las instrucciones del fabricante y use solo kits de montaje aprobados. Evite perforar áreas con cables, gas o tuberías de agua. Use herramientas y equipos de seguridad adecuados. **Mantenimiento Regular:** Inspeccione regularmente para detectar desgaste o daños, especialmente si está montado en la pared. **Reubicación:** Desmonte del soporte de pared antes de moverlo. **Seguridad Infantil:** Manténgalo fuera del alcance de los niños y asegúrese de que los objetos pesados estén montados de forma segura. **Precauciones Sísmicas:** Use soportes especializados en áreas propensas a terremotos. **Seguridad Eléctrica - Fuente de Energía:** Use la fuente de energía especificada; consulte a un electricista si tiene dudas. **Gestión de Cables:** Proteja el cable de alimentación contra daños. **Desconexión de Energía:** Mantenga el enchufe principal accesible; desenchufe durante tormentas o largos periodos de inactividad. **Seguridad de las Baterías - Carga:** Use el cargador del fabricante; evite condiciones extremas. **Exposición al Calor:** Mantenga las baterías alejadas del calor para evitar explosiones o fugas. **Estado de la Batería:** Deje de usarla si la batería está dañada; deséchela adecuadamente. **Reemplazo:** Use solo las baterías recomendadas; tipos incorrectos pueden causar peligros. **Baterías Externas:** Use solo los tipos especificados, respetando la polaridad correcta. **Retiro de Baterías:** Retire las baterías si no se usa durante un período prolongado. **Eliminación:** Siga las normativas locales para la eliminación de baterías; no las incinere. **Seguridad de Conectividad - Conexiones de Cables:** Apague los dispositivos antes de conectar o desconectar cables. **Emparejamiento Bluetooth:** Asegure una conexión segura; evite interferencias de otros dispositivos. **Control de Volumen:** Mantenga un volumen moderado para prevenir daños auditivos. **Seguridad de Conectividad y Datos - Seguridad de Red Inalámbrica:** Revise las políticas de privacidad y asegure su red. **Actualizaciones de Software:** Mantenga el software actualizado para la seguridad y el rendimiento. **Advertencias de Seguridad para Niños - Uso del Producto:** Destinado a adultos; manténgalo fuera del alcance de los niños. **Advertencia sobre Baterías:** Mantenga las baterías y los artículos que contienen baterías fuera del alcance de los niños. **Control de Volumen:** Mantenga un nivel de volumen seguro para proteger la audición de los niños. **Riesgo de Incendio - Materiales Inflamables:** No coloque llamas abiertas cerca del producto. **Sobrecalentamiento:** Evite cubrir el producto para prevenir sobrecalentamientos y riesgos de incendio. **Eliminación y Reciclaje - Eliminación del Producto:** Deséchelo en un centro de reciclaje según las leyes locales. **Cumplimiento Ambiental:** Siga las normativas para la eliminación de baterías y desechos electrónicos. **Mantenimiento del Usuario - Limpieza:** Desenchufe antes de limpiar; use solo un paño seco. **Reparaciones:** Solo personal calificado debe realizar reparaciones. **Protección de Datos:** Restablezca a la configuración de fábrica antes de devolver o desechar el producto. **Descargo de Responsabilidad:** El incumplimiento de estas instrucciones puede resultar en lesiones, muerte o daños a la propiedad. El fabricante no se hace responsable de los daños causados por un uso inadecuado.

Warning & Safety Information

IT

Linee Guida per la Sicurezza e l'Uso (Quando Applicabile)
Informazioni Generali sulla Sicurezza - Leggere e Conservare: Rivedere tutte le istruzioni di sicurezza e di funzionamento prima dell'uso; conservarle per riferimenti futuri. **Seguire le Istruzioni:** Attenersi rigorosamente a tutte le linee guida di sicurezza e operative. **Esposizione all'Acqua:** Tenere il dispositivo lontano dall'acqua; evitare di posizionare liquidi nelle vicinanze. **Ventilazione:** Assicurarsi che le aperture di ventilazione non siano ostruite per evitare il surriscaldamento. **Fonti di Calore:** Tenere il dispositivo lontano da apparecchi che emettono calore. **Montaggio a Parete - Sicurezza dell'Installazione:** Seguire le istruzioni del produttore e utilizzare solo kit di montaggio approvati. Evitare di perforare aree con cavi, gas o tubazioni d'acqua. Utilizzare strumenti e dispositivi di sicurezza adeguati. **Manutenzione Regolare:** Ispezionare regolarmente per verificare l'usura o i danni, soprattutto se montato a parete. **Rilocazione:** Staccare dal supporto a parete prima di spostare. **Sicurezza dei Bambini:** Tenere fuori dalla portata dei bambini e assicurarsi che gli oggetti pesanti siano montati in modo sicuro. **Precauzioni Sismiche:** Utilizzare supporti specializzati nelle zone soggette a terremoti. **Sicurezza Elettrica - Fonte di Alimentazione:** Usare la fonte di alimentazione specificata; consultare un elettricista in caso di dubbi. **Gestione dei Cavi:** Proteggere il cavo di alimentazione da danni. **Disconnessione dell'Energia:** Mantenere la spina principale accessibile; scollegare durante i temporali o in caso di lunghi periodi di inattività. **Sicurezza della Batteria - Carica:** Utilizzare il caricatore del produttore; evitare condizioni estreme. **Esposizione al Calore:** Tenere le batterie lontane dal calore per evitare esplosioni o perdite. **Condizioni della Batteria**: Interrompere l'uso se la batteria è danneggiata; smaltirla correttamente. **Sostituzione:** Usare solo batterie raccomandate; tipi errati possono causare pericoli. **Batterie Esterne:** Utilizzare solo i tipi specificati, osservando la polarità corretta. **Rimozione della Batteria:** Rimuovere le batterie se non utilizzate per un periodo prolungato. **Smaltimento:** Seguire le normative locali per lo smaltimento delle batterie; non incenerire. **Sicurezza della Connettività - Connessioni dei Cavi:** Spegnere i dispositivi prima di collegare o scollegare i cavi. **Accoppiamento Bluetooth:** Assicurare una connessione sicura; evitare interferenze da altri dispositivi. **Controllo del Volume:** Mantenere un volume moderato per prevenire danni all'udito. **Sicurezza della Connettività e dei Dati - Sicurezza della Rete Wireless:** Rivedere le politiche sulla privacy e proteggere la propria rete. **Aggiornamenti Software:** Mantenere il software aggiornato per la sicurezza e le prestazioni. **Avvertenze di Sicurezza per Bambini - Uso del Prodotto:** Destinato agli adulti; tenere lontano dai bambini. **Avvertenza sulla Batteria:** Tenere le batterie e gli oggetti contenenti batterie fuori dalla portata dei bambini. **Controllo del Volume:** Mantenere un livello di volume sicuro per proteggere l'udito dei bambini. **Rischio di Incendio - Materiali Infiammabili:** Non posizionare fiamme libere vicino al prodotto. **Surriscaldamento:** Evitare di coprire il prodotto per prevenire surriscaldamenti e rischi di incendio. **Smaltimento e Riciclaggio - Smaltimento del Prodotto:** Smaltire in un centro di riciclaggio secondo le leggi locali. **Conformità Ambientale:** Seguire le normative per lo smaltimento delle batterie e dei rifiuti elettronici. **Manutenzione dell'Utente - Pulizia:** Scollegare prima della pulizia; utilizzare solo un panno asciutto. **Riparazioni:** Solo personale qualificato deve eseguire le riparazioni. **Protezione dei Dati:** Ripristinare le impostazioni di fabbrica prima di restituire o smaltire il prodotto. **Disclaimer:** Il mancato rispetto di queste istruzioni può causare lesioni, morte o danni materiali. Il produttore non è responsabile per danni causati da un uso improprio.

NL

Veiligheids- en Gebruiksrichtlijnen (Waar van Toepassing)
Algemene Veiligheidsinformatie - Lezen en Bewaren: Lees alle veiligheids- en gebruiksinstructies voor gebruik; bewaar ze voor toekomstig gebruik. **Volg Instructies:** Houd u strikt aan alle veiligheids- en operationele richtlijnen. **Waterblootstelling:** Houd het apparaat uit de buurt van water; vermijd het plaatsen van vloeistoffen in de buurt. **Ventilatie:** Zorg ervoor dat de ventilatieopeningen niet geblokkeerd zijn om oververhitting te voorkomen. **Warmtebronnen:** Houd het apparaat uit de buurt van warmteafgevende apparaten. **Muurbevestiging - Installatieveiligheid:** Volg de instructies van de fabrikant en gebruik alleen goedgekeurde bevestigingssets. Vermijd boren in gebieden met kabels, gas- of waterleidingen. Gebruik geschikte gereedschappen en veiligheidsapparatuur. **Regelmatig Onderhoud:** Inspecteer regelmatig op slijtage of schade, vooral als het aan de muur is bevestigd. **Verplaatsing:** Maak los van de muurbevestiging voordat u het verplaatst. **Kindveiligheid:** Houd buiten het bereik van kinderen en zorg ervoor dat zware voorwerpen veilig zijn gemonteerd. **Seismische Voorzorgsmaatregelen:** Gebruik gespecialiseerde bevestigingen in aardbevingsgevoelige gebieden. **Elektrische Veiligheid - Stroomvoorziening:** Gebruik de gespecificeerde stroombron; raadpleeg een elektricien bij twijfel. **Kabelbeheer:** Bescherm het netsnoer tegen beschadiging. **Stroomuitschakeling:** Zorg ervoor dat de hoofdstekker toegankelijk blijft; trek de stekker uit tijdens onweer of lange perioden van niet-gebruik. **Batterijveiligheid Opladen:** Gebruik de oplader van de fabrikant; vermijd extreme omstandigheden. **Hittesensitiviteit:** Houd batterijen uit de buurt van hitte om explosie of lekkage te voorkomen. **Batterijconditie:** Stop met het gebruik als de batterij beschadigd is; gooi deze op de juiste manier weg. **Vervanging:** Gebruik alleen aanbevolen batterijen; onjuiste types kunnen gevaren opleveren. **Externe Batterijen:** Gebruik alleen gespecificeerde types, met inachtneming van de juiste polariteit. **Verwijderen van Batterijen:** Verwijder batterijen als ze voor langere tijd niet worden gebruikt. **Afvalverwerking:** Volg de lokale voorschriften voor het weggooien van batterijen; verbrand ze niet. **Verbindingsveiligheid - Kabelaansluitingen:** Schakel apparaten uit voordat u kabels aansluit of loskoppelt. **Bluetooth-koppeling:** Zorg voor een veilige verbinding; vermijd interferentie van andere apparaten. **Volumeregeling:** Houd het volume gematigd om gehoorbeschadiging te voorkomen. **Verbindings en Gegevensbeveiliging - Draadloze Beveiliging:** Controleer het privacybeleid en beveilig uw netwerk. **Software-updates:** Houd de software up-to-date voor veiligheid en prestaties. **Waarschuwingen voor Kindveiligheid - Productgebruik:** Bedoeld voor volwassenen; houd uit de buurt van kinderen. **Batterijwaarschuwing:** Houd batterijen en voorwerpen met batterijen buiten het bereik van kinderen. **Volumeregeling:** Houd een veilig volume om het gehoor van kinderen te beschermen. **Brandgevaar - Ontvlambare Materialen:** Plaats geen open vuur in de buurt van het product. **Oververhitting:** Bedek het product niet om oververhitting en brandrisico's te voorkomen. **Afvalverwerking en Recycling - Productafval:** Verwijder het bij een recyclingcentrum volgens de lokale wetgeving. **Milieu-naleving:** Volg de voorschriften voor het weggooien van batterijen en elektronisch afval. **Gebruikersonderhoud - Schoonmaak:** Trek de stekker uit voordat u schoonmaakt; gebruik alleen een droge doek. **Onderhoud:** Alleen gekwalificeerd personeel mag reparaties uitvoeren. **Gegevensbescherming:** Stel terug naar de fabrieksinstellingen voordat u het product retourneert of weggooit. **Disclaimer:** Het niet volgen van deze instructies kan leiden tot letsel, overlijden of materiële schade. De fabrikant is niet aansprakelijk voor schade veroorzaakt door onjuist gebruik.

OAKCASTLE



UK CA CE RoHS

WWW.OAKCASTLE.CO.UK